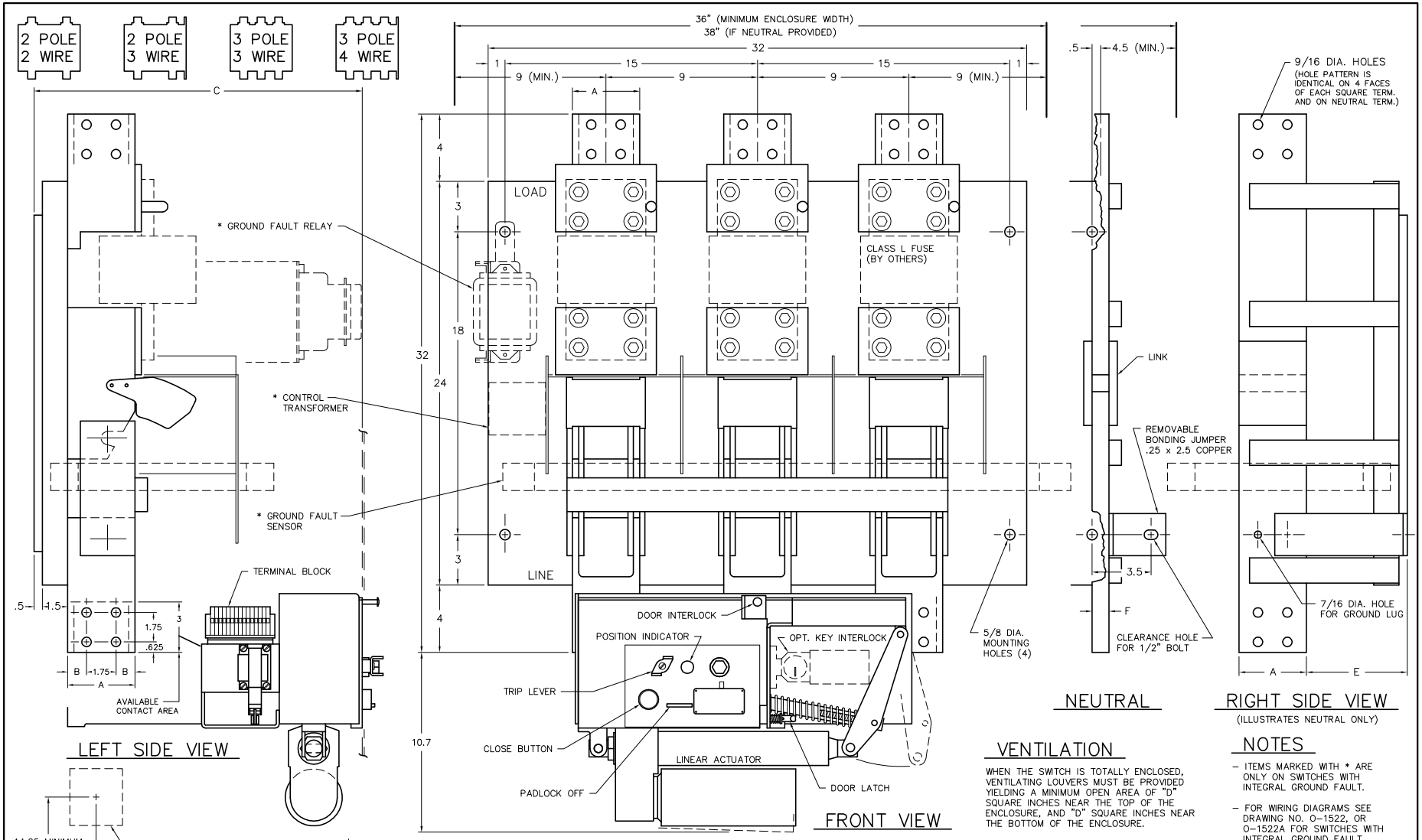

VENTILATION

WHEN THE SWITCH IS TOTALLY ENCLOSED, VENTILATING LOUVERS MUST BE PROVIDED YIELDING A MINIMUM OPEN AREA OF "D" SQUARE INCHES NEAR THE TOP OF THE ENCLOSURE, AND "D" SQUARE INCHES NEAR THE BOTTOM OF THE ENCLOSURE.

NOTES

- ITEMS MARKED WITH * ARE ONLY ON SWITCHES WITH INTEGRAL GROUND FAULT.
- FOR WIRING DIAGRAMS SEE DRAWING NO. O-1522, OR O-1522A FOR SWITCHES WITH INTEGRAL GROUND FAULT.

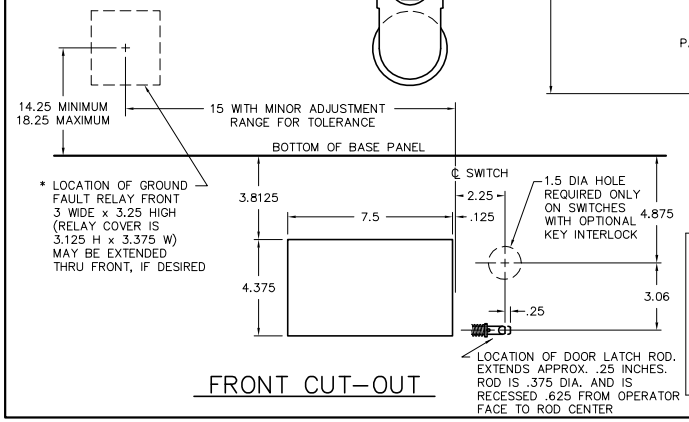

FRONT CUT-OUT

	VOLTAGE	AMP	CATALOG NUMBER 2-P, 2-W	2-P, 3-W	3-P, 3-W	3-P, 4-W	NET WT. (3-P, 3-W)	A	B	C	D	E	F
	480	4000	SLB2413-MST	SLB3413-N-MST	SLB3413-MST	SLB4413-N-MST		4	1.125	19.5	80 SQ. IN.	6	1
		5000	SLB2414-MST		SLB3414-MST			5	1.625	20	120 SQ. IN.		
		6000	SLB2415-MST		SLB3415-MST			5	1.625	20	120 SQ. IN.		
SWITCHES EQUIPED WITH INTEGRAL GROUND FAULT PROTECTION EQUIPEMENT	120/240	4000		SLB3413-G1-MST									
	240				SLB3413-G2-MST								
	208Y/120					SLB3413-G3-MST							
	240/120					SLB3413-G4-MST							
	480				SLB3413-G5-MST								
	480Y/277					SLB3413-G6-MST							
	380Y/220					SLB3413-G9-MST							

REV. 5 4-8-10 JAE DOOR LATCH ADDED TO FRONT CUTOUT

SERIES SLB SWITCHES, 4000-6000A, 480VAC WITH MOTORIZED SHUNT TRIP OPERATOR

SCALE:
APPROVED BY:
DRAWN BY WCE
DATE: 12-14-92
REVISED 5

boltswitch, inc.
CRYSTAL LAKE, ILLINOIS 60014

DRAWING NUMBER
O-1156A